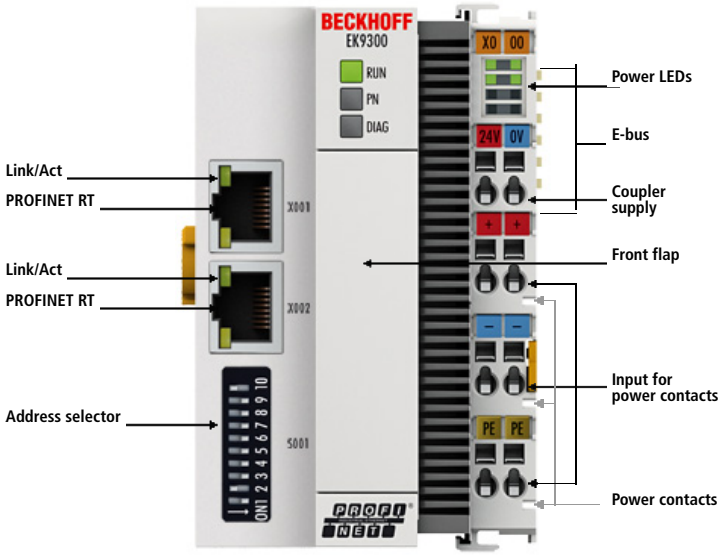

EK9300 | PROFINET RT Bus Coupler

The EK9300 Bus Coupler connects PROFINET RT networks to the EtherCAT Terminals (ELxxxx) as well as the EtherCAT Box modules (EPxxxx) and converts the telegrams from PROFINET RT to the E-bus signal representation. One station consists of an EK9300 and any number of EtherCAT Terminals. The coupler is connected to PROFINET RT via RJ45. In EtherCAT, the PROFINET RT coupler has at its disposal a lower-level, powerful and ultra-fast I/O system with a large selection of terminals. The coupler supports the PROFINET RT profile and fits seamlessly into PROFINET RT networks.

Technical data	EK9300
Task within EtherCAT system	coupling of standard digital and analog EtherCAT Terminals and EtherCAT Box modules to PROFINET RT networks
Number of EtherCAT Terminals	depending on the process data size
Type/number of peripheral signals	depending on the process data size
Protocol	PROFINET RT
Data transfer rates	10/100 Mbaud
Configuration	not required
Bus interface	2 x RJ45 (switched)
Power supply	24 V DC (-15 %/+20 %)
Input current	typ. 120 mA + (total E-bus current)/4
Current consumption E-bus	up to 2 A
Power contacts	24 V DC max./10 A max.
Electrical isolation	500 V (power contact/supply voltage/Ethernet)
Dimensions (W x H x D)	64 mm x 100 mm x 73 mm
Operating/storage temperature	0…+55 °C/-25…+85 °C
Relative humidity	95 %, no condensation
Vibration/shock resistance	conforms to EN 60068-2-6/EN 60068-2-27
EMC immunity/emission	conforms to EN 61000-6-2/EN 61000-6-4
Protect. class/installation pos.	IP 20/variable
Approvals	CE, UL, Ex

Accessories	
Cordsets	cordsets and connectors
FC9001-0010 | FC9011	Ethernet PCI fieldbus cards

System	
PROFINET	For further PROFINET products please see the system overview

We reserve the right to make technical changes.